MITSUBISHI OUTLANDER

5 doors / 5 seats / 7 seats / Station wagon

(2025 -)

*1 : Gas strut <Manual tailgate>

*2 : Preloaded spring <Power tailgate>

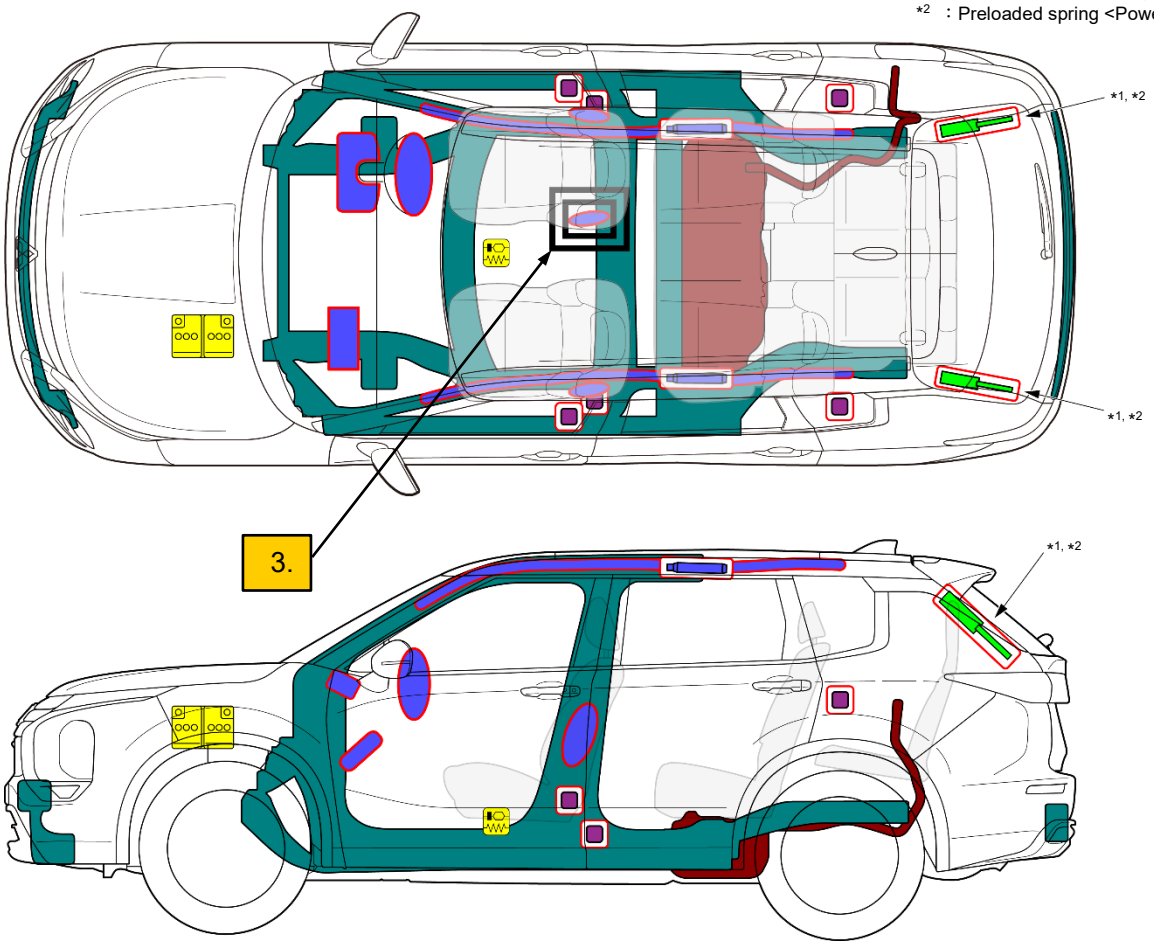

	Airbag		Stored gas inflator		Seat belt Pretensioner		SRS control unit		Pedestrian protection active system
	Automatic rollover protection system		Gas strut / Preloaded spring		High strength Zone		Zone requiring special attention		
	Battery low voltage		Ultra capacitor, low voltage		Fuel tank		Gas tank		Safety valve
	High voltage battery pack		High voltage power cable / component		High voltage disconnect		Fuse box disabling high voltage system		Ultra capacitor, high voltage

ID No.	Version No.	Version Date.	Page
GMW-ANRS-EN04	01	04/2025	1/4

© MITSUBISHI MOTORS CORPORATION. All rights reserved.

1. Identification / recognition

Features on vehicle exterior

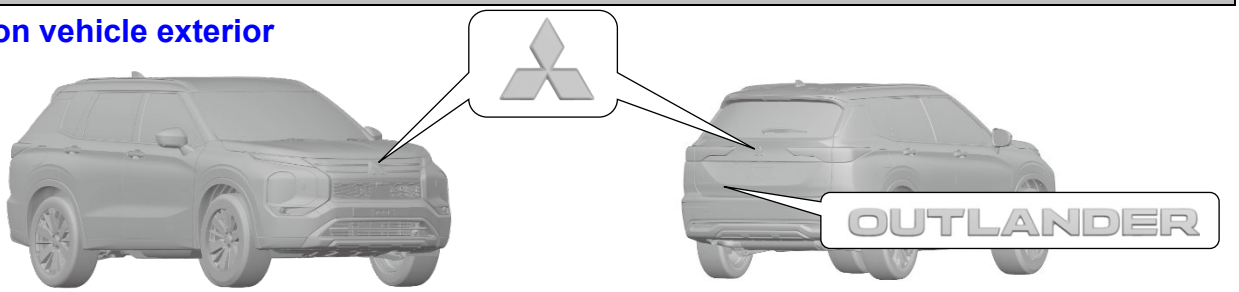

2. Immobilisation / stabilization / lifting

Immobilize the vehicle

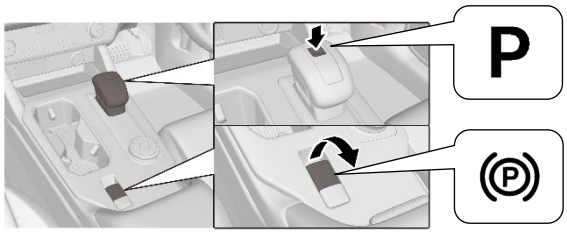

Block the wheels and set the parking brake.
Put the car in “P” position.

Support positions for Jack and Lift

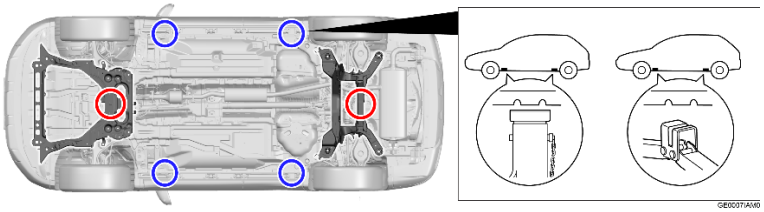

O: Support position for Garage Jack
O: Support position for Jack or Axle stands or Lift

3. Disable direct hazards / safety regulations

How to determine if vehicle is ON / OFF

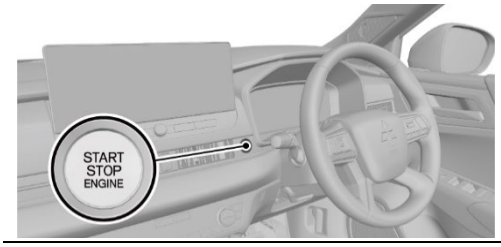

OFF
Check that the illumination of the "combination meter" is off.

ON
When the power switch is “ON”, “combination meter” light up.

How to disconnect the 12V battery negative terminal

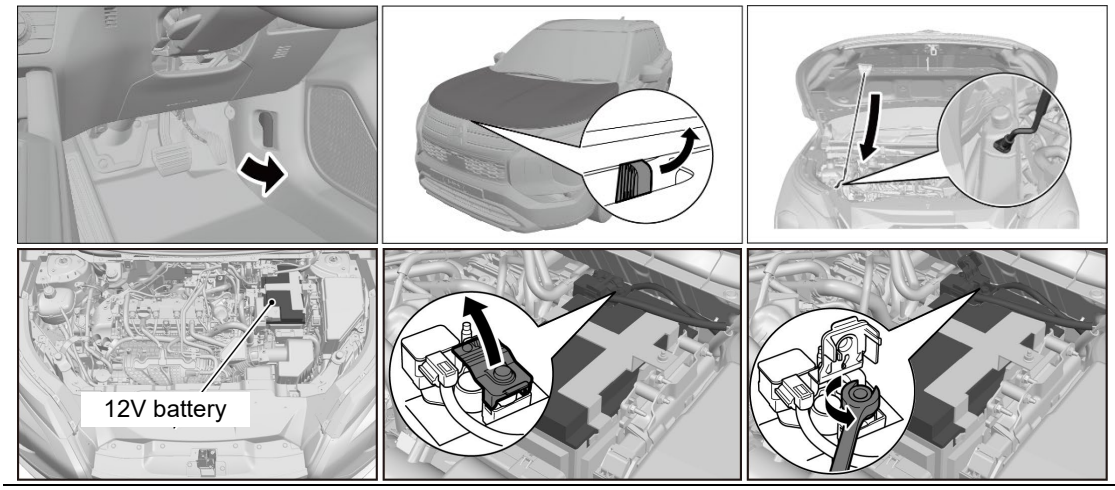

⚠ Do not apply excessive force to not strongly hit the airbag installation area.

Driver’s seat has a Front seat-mounted SRS centre airbag in addition to the side airbag.
Location of far side airbag is shown in the mark 3 on page 1.

© MITSUBISHI MOTORS CORPORATION. All rights reserved.

4. Access to the occupants

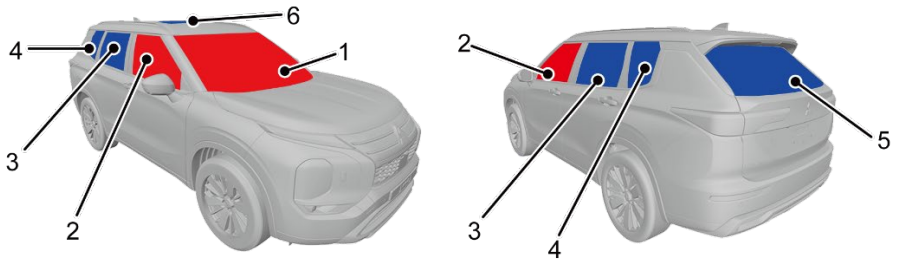

1 – 2 : Laminated glass
3 – 6 : Tempered glass

Steering adjustment

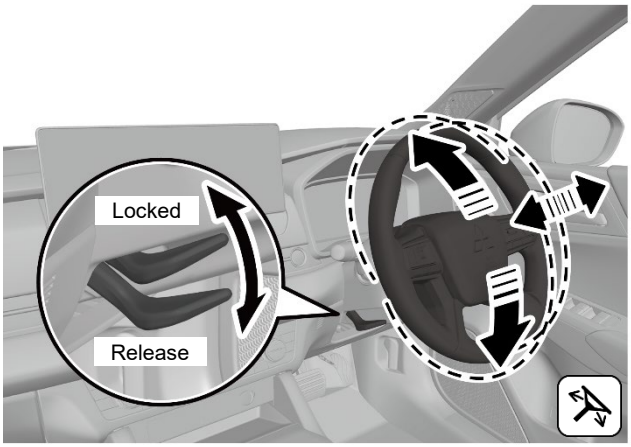

Seat adjustment

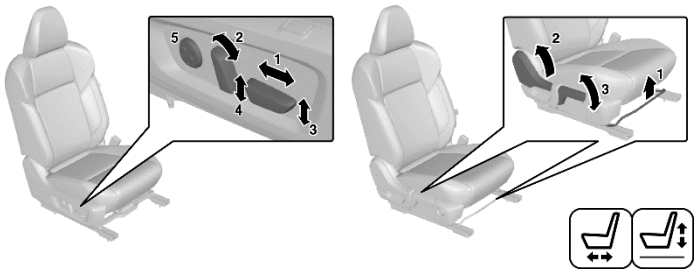

Power Seat
1 : Forward or backward
2 : Recline the seatback
3 : Seat tilt
4 : Seat height
5 : Lumbar support

Manual Seat
1 : Forward or backward
2 : Recline the seatback
3 : Seat height
(driver's side only)

High-tensile and Ultra-high-tensile steel panels location

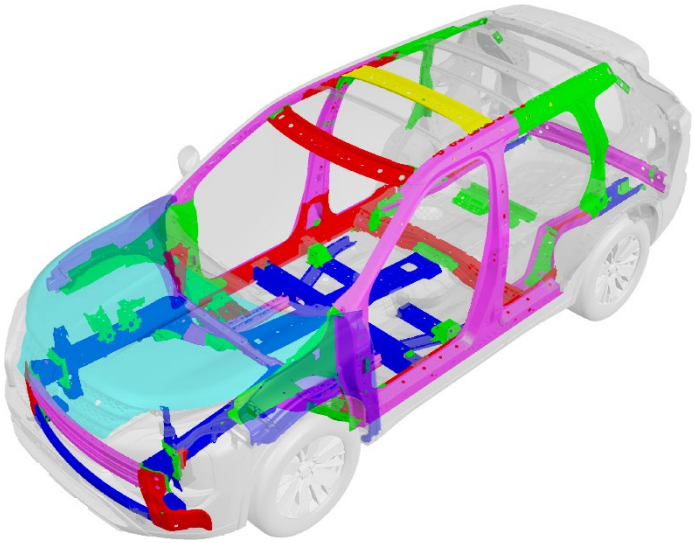

: - 440MPa	:590MPa
:780MPa	:980MPa
:1180MPa	:1470MPa
:Plastic *Used in the Front fender	:Aluminum *Used in the Hood

5. Stored energy / liquids / gases / solids

Fluids / gases used in this vehicle

	Fuel tank	55 liters		Refrigerant (air conditioner)	HFO-1234yf(R-1234yf): 550g
	12V Battery	L3-EFB 70 Ah		Hood	Aluminum

Ⓒ MITSUBISHI MOTORS CORPORATION. All rights reserved.

6. In case of fire

Use large amount of water

RE-IGNITION POSSIBLE !

Never use seawater or any water containing salt.

7. In case of submersion

Submerged Vehicle

・If the vehicle is submerged or partially submerged, first pull the occupants out of the vehicle and water.

8. Towing / transportation / storage

How to Transport

Store the vehicle at a safe distance from other vehicles.

9. Important additional information

Supplemental Restraint System (SRS) Location

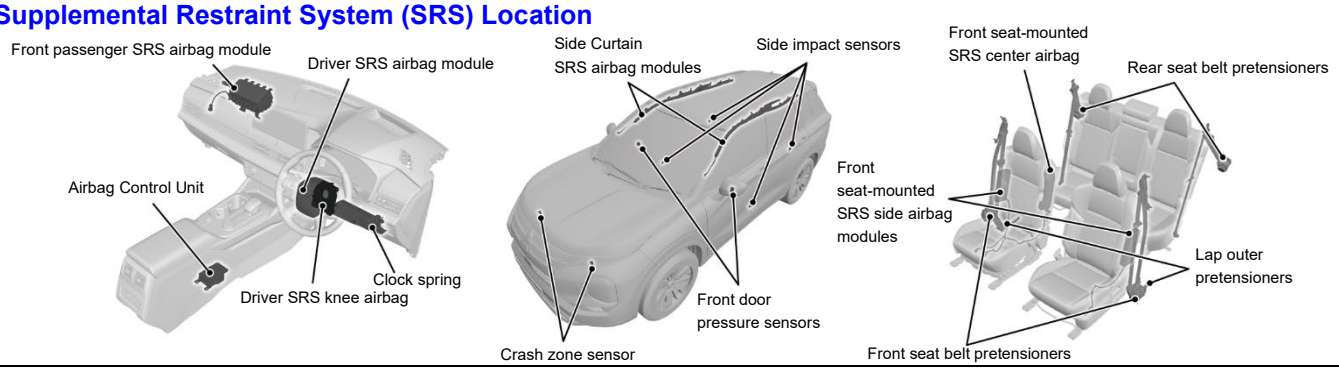

10. Explanation of pictograms used

	Keyless operation key distance		Device to shut down power in vehicle		Risk of damaging human health
	Caution		Warning, low temperature		Risk of flammability
	Open Hood		Air-conditioning component		Risk of an explosion
	Fuel tank		Use water to extinguish the fire		Risk of corrosive material / substances
	Seat height adjustment		Steering wheel, tilt control		Risk of acute toxicity
	Seat adjustment, longitudinal		Right hand drive		Use thermal infrared camera

© MITSUBISHI MOTORS CORPORATION. All rights reserved.